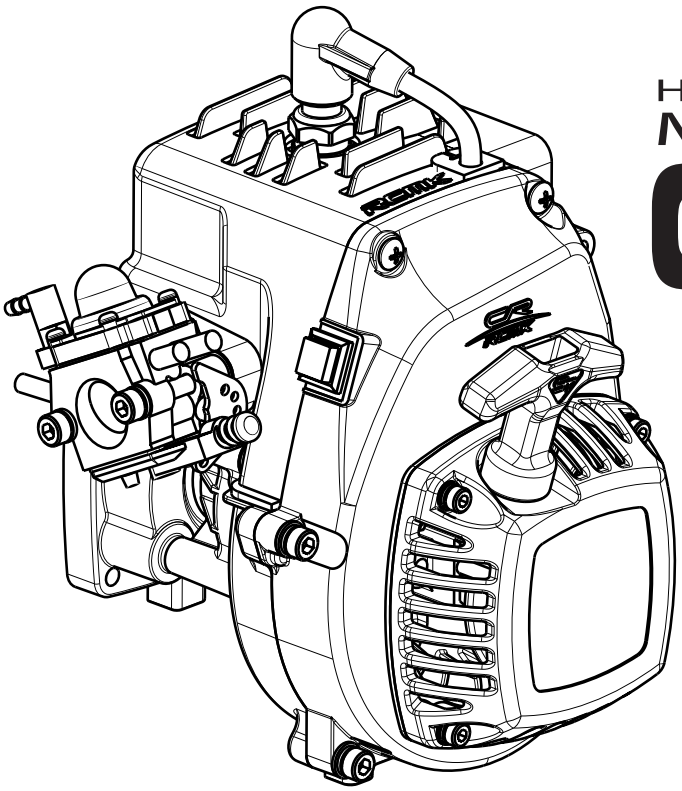

HIGH PERFORMANCE
Model Gas Engine
CR290F

Engine Features

- 4 bearings crank case
- 6001 standard bearing for crankshaft
- Stronger crankshaft and connecting rod
- Walbro WT-1052 carburator
- Forced air-cooling system
- Hand pull start system

WARNING

Model Gas Engine CR290F
www.rcmk.com

- Before use engine, read description necessarily.
- This engine is designed and made for use on radio controlled car. So we recommend to use on model boat
- Use genuine parts for replacement.
- Check the bolts fixation condition of engine every time. If the bolts are loosed, fix the loosed bolt, and after check once again.

Specifications

Model Gas Engine CR290F
www.rcmk.com

Type	Two stroke gasoline engine
Cooling System	Forced Air Cooled
The direction of the exhaust	Side exhaust
Displacement	28.5 cc
Bore	36.0 mm
Stroke	28.0 mm
Dry weight	1.90 Kg
Overall Dimension	160 mm x 74 mm x 98 mm

Rotation Direction	CCR (CounterClockwise Rotation)
Fuel	Pre-mixen Fuel, 25(gasoline) : 1 (oil)
Lubrication Oil	High grade two cycle engine oil
Carburater	WT-1052
Ignition	non-contact electronic ignition
Spark Plug	CMR7H
Starting	Recoil starter

http://www.rcmk.com E-mail. pjh0088@gmail.com , rcmk@korea.com Tel. 82-41-936-1835 Fax. 82-41-936-1836

Parts list

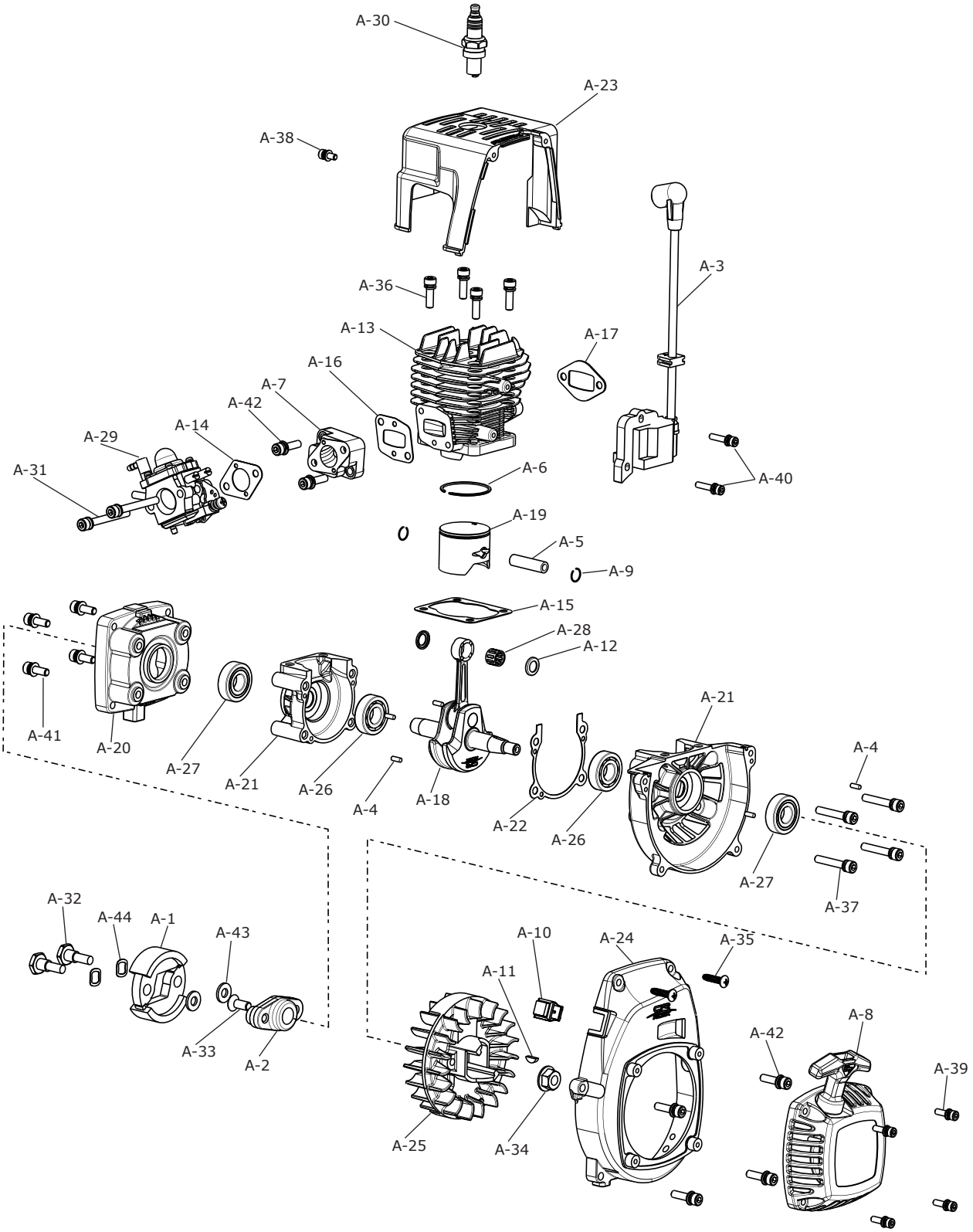

http://www.rcmk.com E-mail. pjh0088@gmail.com , rcmk@korea.com Tel. 82-41-936-1835 Fax. 82-41-936-1836

Key	Part Number	Description	Q'TY	Key	Part Number	Description	Q'TY
A-1	RE0C9-2E	Clutch shoe set (CR)	1	A-23	RE1F5-03	Engine Cover	1
A-2	RE0C9-28	Clutch Shoe Holder (18mm)	1	A-24	RE1F5-04	Flywheel Cover	1
A-3	RE0C9-23	Coil (one body type)	1	A-25	RE1F5-02	Flywheel	1
A-4	RE0C9-02	Pin 3P x 8	5	A-26	RO065-01	Bearing 6001C3	2
A-5	RE0C9-25	Piston pin for K30S	1	A-27	RO065-03	Bearing 6001JRXLLU	2
A-6	RE0C9-21	Piston Ring 36mm	1	A-28	RO067-01	Needle Roller Bearing KT 8 11 10	1
A-7	RE0C9-0E	R254 Insulator block	1	A-29	RO071-04	Carburator WT-1052	1
A-8	RE0C9-22	Recoil Starter(Air cooler)	1	A-30	RO073-03	Spark Plug - CMR7H	1
A-9	RE0C9-16	Snap-ring - C type	2	A-31		Bolt M5x45	2
A-10	RE0C9-24	Switch	1	A-32		Special Bolt M6x13, 8mm	2
A-11	RE0C9-1C	Woodruff Key	1	A-33		M6x15	1
A-12	RE0C9-1D	Wrist Pin Bearing Spacer	2	A-34		Nut M8	1
A-13	RE0CB-0B	CR290 Cylinder	1	A-35		Screw Tap2 M4.5	2
A-14	RE0CD-01	Gasket for Carburator	1	A-36		SEMS Bolt 1, M5x17	4
A-15	RE0CD-0B	Gasket for Cylinder (K30,CR)(0.2)	1	A-37		SEMS Bolt 1, M5x30	4
A-16	RE0CD-06	Gasket for Insulator	1	A-38		SEMS Bolt 2, M4x10	1
A-17	RE0CD-10	Gasket for Muffler (CR)	1	A-39		SEMS Bolt 2, M4x15	4
A-18	RE0CF-07	Crank assembly for CR	1	A-40		SEMS Bolt 2, M4x20	2
A-19	RE197-01	K30S Piston	1	A-41		SEMS Bolt 2, M5x15	4
A-20	RE1F5-05	Clutch Case	1	A-42		SEMS Bolt 2, M5x20	6
A-21	RE1F5-01	CR290F Crankcase	1	A-43		Washer P6x1.6	2
A-22	RE1F5-06	CR290F Gasket for Crankcase	1	A-44		Wavewasher BWW 624	2

Carburetor Setting

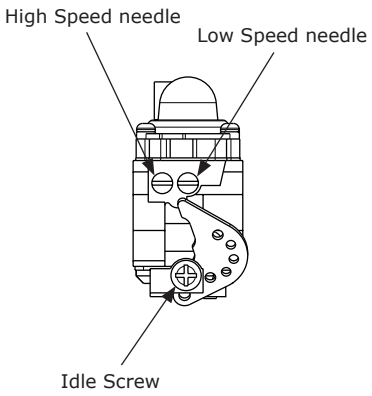

High Speed Needle	1 3/4 ± 1/4
Low Speed Needle	1 1/4 ± 1/8

When the needle valve clockwise rotation will increase the RPM.
And if you rotate counter-clockwise to decrease RPM.

1. Do not tighten the High and Low Speed needles too firmly.
2. When the unit has just started and the engine is not warm enough, there may be insufficient acceleration and the engine may be stopped. Be sure to perform idling before operation.

http://www.rcmk.com E-mail. pjh0088@gmail.com , rcmk@korea.com Tel. 82-41-936-1835 Fax. 82-41-936-1836

Outside view

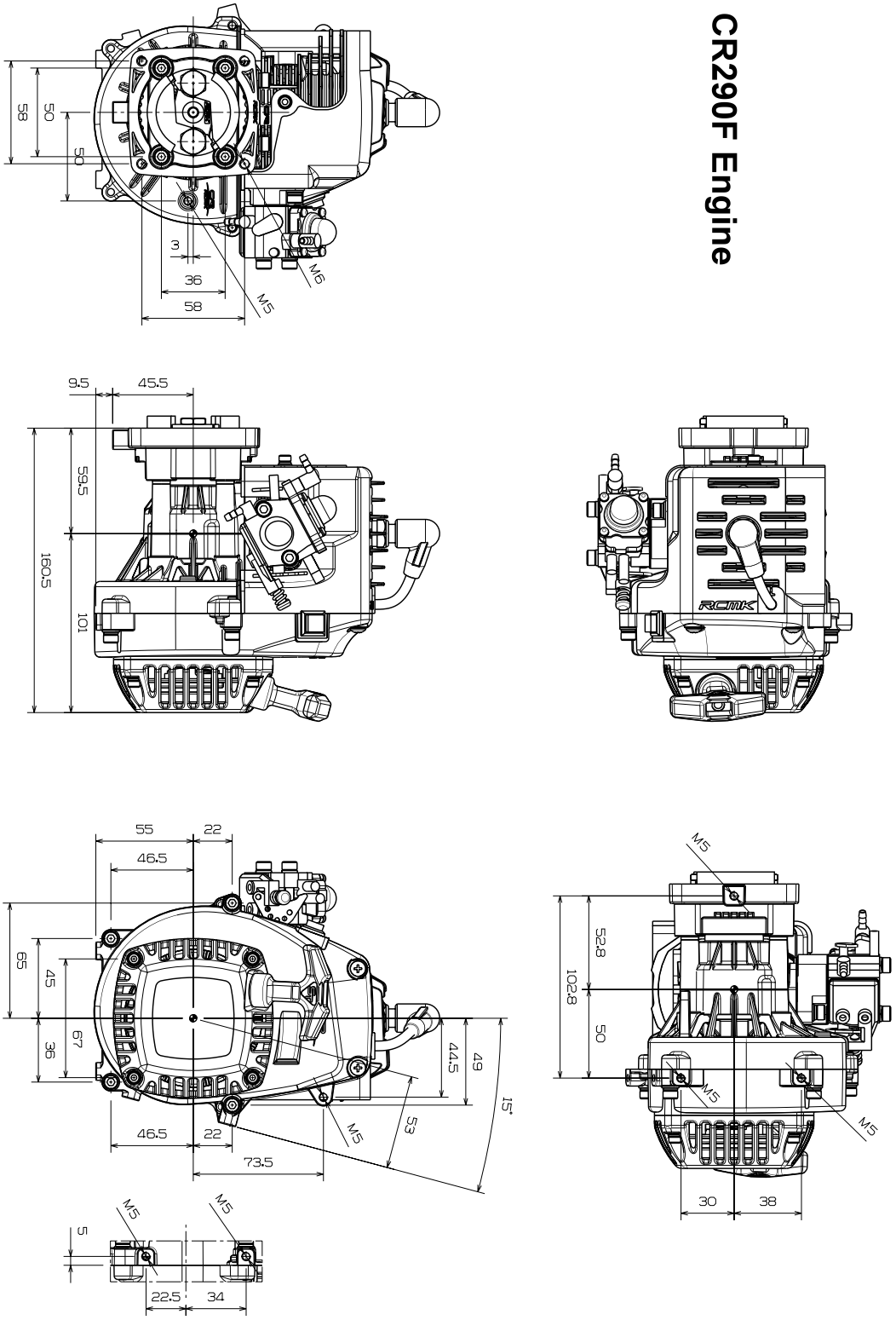

Update - 2012/06/05

http://www.rcmk.com E-mail. pjh0088@gmail.com , rcmk@korea.com Tel. 82-41-936-1835 Fax. 82-41-936-1836